SN74CBTLV3253 Low-Voltage Dual 1-of-4 FET Multiplexer/Demultiplexer

1 Features

- Functionally Equivalent to QS3253
- 5-Ω Switch Connection Between Two Ports
- Rail-to-Rail Switching on Data I/O Ports
- I_{off} Supports Partial-Power-Down Mode Operation
- Latch-Up Performance Exceeds 100 mA Per JESD 78, Class II

2 Applications

- Video Broadcasting: IP-Based Multi-Format Transcoders
- Video Communications Systems

3 Description

The SN74CBTLV3253 device is a dual 1-of-4 high-speed FET multiplexer and demultiplexer. The low ON-state resistance of the switch allows connections to be made with minimal propagation delay.

The select (S0, S1) inputs control the data flow. The FET multiplexers/demultiplexers are disabled when the associated output-enable ($\overline{OE}$) input is high.

The SN74CBTLV3253 device is fully specified for partial-power-down applications using I_{off}. The I_{off} feature ensures that damaging current will not backflow through the device when it is powered down. The device has isolation during power off.

Device Information(1)

PART NUMBER	PACKAGE	BODY SIZE (NOM)
SN74CBTLV3253D	SOIC (16)	9.90 mm × 3.90 mm
SN74CBTLV3253DBQ	SSOP (16)	4.90 mm × 3.90 mm
SN74CBTLV3253DGV	TVSOP (16)	3.60 mm × 4.40 mm
SN74CBTLV3253RGY	VQFN (16)	4.00 mm × 3.50 mm
SN74CBTLV3253PW	TSSOP (16)	5.00 mm × 4.40 mm

(1) For all available packages, see the orderable addendum at the end of the data sheet.

Logic Diagram (Positive Logic)

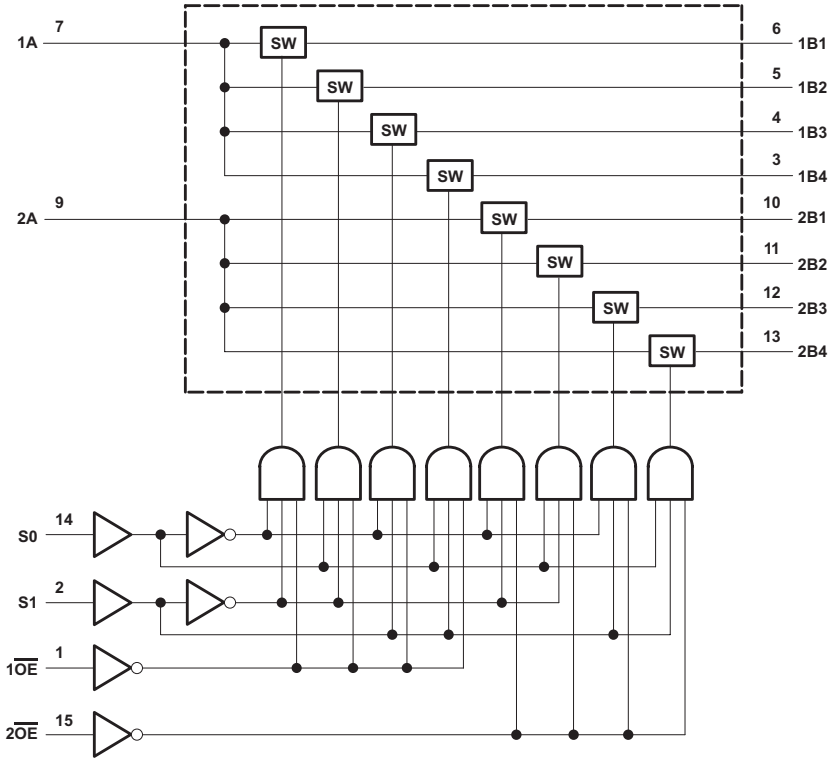

An IMPORTANT NOTICE at the end of this data sheet addresses availability, warranty, changes, use in safety-critical applications, intellectual property matters and other important disclaimers. PRODUCTION DATA.

Table of Contents

1 Features ... 1
2 Applications ... 1
3 Description ... 1
4 Revision History ... 2
5 Pin Configuration and Functions ... 3
6 Specifications ... 4
6.1 Absolute Maximum Ratings ... 4
6.2 ESD Ratings ... 4
6.3 Recommended Operating Conditions ... 4
6.4 Thermal Information ... 4
6.5 Electrical Characteristics ... 5
6.6 Switching Characteristics ... 5
6.7 Typical Characteristics ... 6
7 Parameter Measurement Information ... 7
8 Detailed Description ... 8
8.1 Overview ... 8
8.2 Functional Block Diagram ... 8
8.3 Feature Description ... 8
8.4 Device Functional Modes ... 8
9 Application and Implementation ... 9
9.1 Application Information ... 9
9.2 Typical Application ... 9
10 Power Supply Recommendations ... 10
11 Layout ... 11
11.1 Layout Guidelines ... 11
11.2 Layout Example ... 11
12 Device and Documentation Support ... 12
12.1 Documentation Support ... 12
12.2 Community Resources ... 12
12.3 Trademarks ... 12
12.4 Electrostatic Discharge Caution ... 12
12.5 Glossary ... 12
13 Mechanical, Packaging, and Orderable Information ... 12

4 Revision History

NOTE: Page numbers for previous revisions may differ from page numbers in the current version.

Changes from Revision I (February 2014) to Revision J	Page
• Changed the *Thermal Information* table	4

Changes from Revision H (February 2014) to Revision I	Page
• Added *Applications* section, *Device Information* table, *Pin Configuration and Functions* section, *ESD Ratings* table, *Feature Description* section, *Device Functional Modes*, *Application and Implementation* section, *Power Supply Recommendations* section, *Layout* section, *Device and Documentation Support* section, and *Mechanical, Packaging, and Orderable Information* section	1

Changes from Revision G (February 2014) to Revision H	Page
• Updated data sheet – no specific changes	1

Changes from Revision F (July 2012) to Revision G	Page
• Deleted *Ordering Information* table.	1

Copyright © 1997–2018, Texas Instruments Incorporated

5 Pin Configuration and Functions

D, DBQ, DGV, or PW Package
16-Pin SOIC, SSOP, TVSOP, or TSSOP
Top View

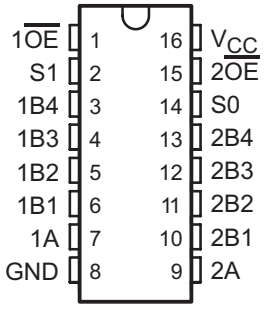

RGY Package
16-Pin VQFN
Top View

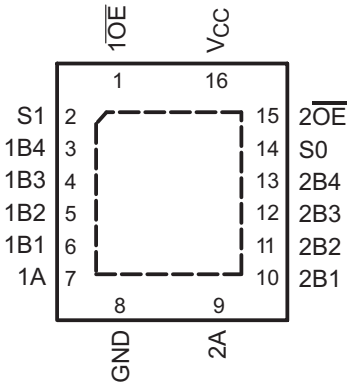

Pin Functions

PIN		I/O	DESCRIPTION
NAME	NO.		
$1\overline{OE}$	1	I	Output Enable 1 Active-Low
S1	2	I	Select Pin 1
1B4	3	I/O	Channel 1 I/O 4
1B3	4	I/O	Channel 1 I/O 3
1B2	5	I/O	Channel 1 I/O 2
1B1	6	I/O	Channel 1 I/O 1
1A	7	I/O	Channel 1 common
GND	8	—	Ground
2A	9	I/O	Channel 2 common
2B1	10	I/O	Channel 2 I/O 1
2B2	11	I/O	Channel 2 I/O 2
2B3	12	I/O	Channel 2 I/O 3
2B4	13	I/O	Channel 2 I/O 4
S0	14	I	Select Pin 0
$2\overline{OE}$	15	I	Output Enable 2 Active-Low
V_{CC}	16	—	Power

Copyright © 1997–2018, Texas Instruments Incorporated

6 Specifications

6.1 Absolute Maximum Ratings

over operating free-air temperature range (unless otherwise noted)[1]

			MIN	MAX	UNIT
V_{CC}	Supply voltage		–0.5	4.6	V
V_{IN}	Control input voltage[2]		–0.5	4.6	V
$V_{I/O}$	Switch I/O voltage[2]		–0.5	4.6	V
I_{IK}	Control input clamp current	$V_{IN} < 0$		–50	mA
$I_{I/OK}$	I/O port clamp current	$V_{I/O} < 0$		–50	mA
	Continuous current through V_{CC} or GND			±128	mA
T_J	Junction temperature			150	°C
T_{stg}	Storage temperature		–65	150	°C

(1) Stresses beyond those listed under *Absolute Maximum Ratings* may cause permanent damage to the device. These are stress ratings only, and functional operation of the device at these or any other conditions beyond those indicated under *Recommended Operating Conditions* is not implied. Exposure to absolute-maximum-rated conditions for extended periods may affect device reliability.
(2) The input and output negative-voltage ratings may be exceeded if the input and output clamp-current ratings are observed.

6.2 ESD Ratings

			VALUE	UNIT
V_{ESD}	Electrostatic discharge	Human Body Model (HBM), per ANSI/ESDA/JEDEC JS-001, all pins[1]	+2000	V
		Charged-Device Model (CDM), per JEDEC specification JESD22-C101, all pins[2]	+1000	V

(1) JEDEC document JEP155 states that 500-V HBM allows safe manufacturing with a standard ESD control process.
(2) JEDEC document JEP157 states that 250-V CDM allows safe manufacturing with a standard ESD control process.

6.3 Recommended Operating Conditions

over operating free-air temperature range (unless otherwise noted)[1]

			MIN	MAX	UNIT
V_{CC}	Supply voltage		2.3	3.6	V
V_{IH}	High-level control input voltage	V_{CC} = 2.3 V to 2.7 V	1.7		V
		V_{CC} = 2.7 V to 3.6 V	2		
V_{IL}	Low-level control input voltage	V_{CC} = 2.3 V to 2.7 V		0.7	V
		V_{CC} = 2.7 V to 3.6 V		0.8	
T_A	Operating free-air temperature		–40	85	°C

(1) All unused control inputs of the device must be held at V_{CC} or GND to ensure proper device operation. Refer to the TI application report, *Implications of Slow or Floating CMOS Inputs*, SCBA004.

6.4 Thermal Information

THERMAL METRIC[1]		SN74CBTLV3253					UNIT
		D (SOIC)	DBQ (SSOP)	DGV (TVSOP)	PW (TSSOP)	RGY (VQFN)	
		16 PINS	16 PINS	16 PINS	16 PINS	16 PINS	
$R_{\theta JA}$	Junction-to-ambient thermal resistance	86.7	112.4	123.1	110.9	47.1	°C/W
$R_{\theta JC(top)}$	Junction-to-case (top) thermal resistance	47.8	63.6	48.7	45.8	58.5	°C/W
$R_{\theta JB}$	Junction-to-board thermal resistance	43.7	54.8	54.9	56.0	24.0	°C/W
ψ_{JT}	Junction-to-top characterization parameter	12.3	17.0	5.2	5.4	1.8	°C/W
ψ_{JB}	Junction-to-board characterization parameter	43.5	54.4	54.3	55.4	24.0	°C/W
$R_{\theta JC(bot)}$	Junction-to-case (bottom) thermal resistance	n/a	n/a	n/a	n/a	9.6	°C/W

(1) For more information about traditional and new thermal metrics, see the *Semiconductor and IC Package Thermal Metrics* application report.

Copyright © 1997–2018, Texas Instruments Incorporated

6.5 Electrical Characteristics

over recommended operating free-air temperature range (unless otherwise noted)

PARAMETER		TEST CONDITIONS			MIN	TYP(1)	MAX	UNIT
V_{IK}		V_{CC} = 3 V,	I_I = –18 mA				–1.2	V
I_I		V_{CC} = 3.6 V,	V_I = V_{CC} or GND				±1	µA
I_{off}		V_{CC} = 0,	V_I or V_O = 0 to 3.6 V				15	µA
I_{CC}		V_{CC} = 3.6 V,	I_O = 0,	V_I = V_{CC} or GND			10	µA
ΔI_{CC}(2)	Control inputs	V_{CC} = 3.6 V,	One input at 3 V,	Other inputs at V_{CC} or GND			300	µA
C_i	Control inputs	V_I = 3 V or 0				3		pF
$C_{io(OFF)}$	A port	V_O = 3 V or 0,	$\overline{OE}$ = V_{CC}			20.5		pF
	B port					5.5		
r_{on}(3)		V_{CC} = 2.3 V, TYP at V_{CC} = 2.5 V	V_I = 0	I_I = 64 mA		5	8	Ω
				I_I = 24 mA		5	8	
			V_I = 1.7 V,	I_I = 15 mA		27	40	
		V_{CC} = 3 V	V_I = 0	I_I = 64 mA		5	7	
				I_I = 24 mA		5	7	
			V_I = 2.4 V,	I_I = 15 mA		10	15	

(1) All typical values are at V_{CC} = 3.3 V (unless otherwise noted), T_A = 25°C.
(2) This is the increase in supply current for each input that is at the specified voltage level, rather than V_{CC} or GND.
(3) Measured by the voltage drop between the A and the B terminals at the indicated current through the switch. On-state resistance is determined by the lower of the voltages of the two (A or B) terminals.

6.6 Switching Characteristics

over recommended operating free-air temperature range (unless otherwise noted) (see Figure 2)

PARAMETER	FROM (INPUT)	TO (OUTPUT)	V_{CC} = 2.5 V ± 0.2 V		V_{CC} = 3.3 V ± 0.3 V		UNIT
			MIN	MAX	MIN	MAX	
t_{pd}	A or B(1)	B or A		0.15		0.25	ns
	S	A or B	1	6.8	1	5.5	
t_{en}	S	A or B	1	4.3	1	4	ns
t_{dis}	S	A or B	1	5.1	1	5.5	ns
t_{en}	$\overline{OE}$	A or B	1	5	1	4.8	ns
t_{dis}	$\overline{OE}$	A or B	1	5.5	1	5.4	ns

(1) The propagation delay is the calculated RC time constant of the typical on-state resistance of the switch and the specified load capacitance, when driven by an ideal voltage source (zero output impedance).

Copyright © 1997–2018, Texas Instruments Incorporated

6.7 Typical Characteristics

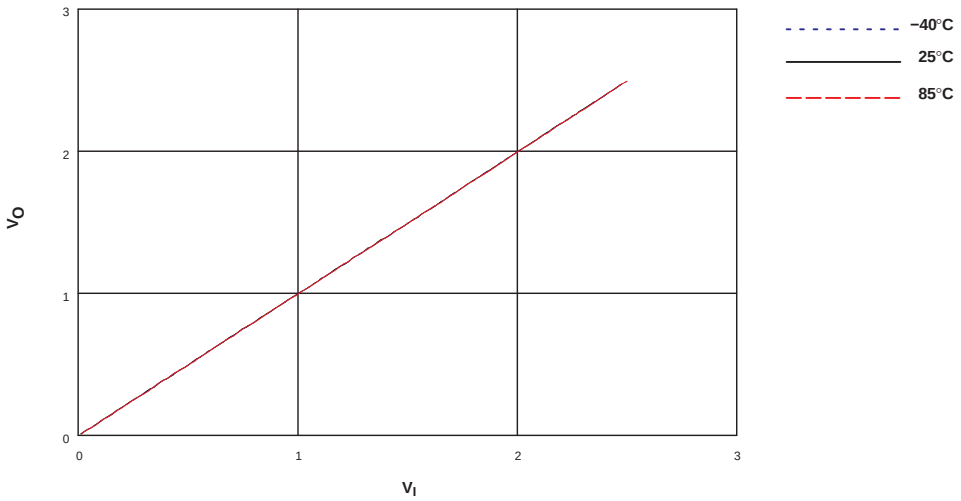

Figure 1. V_O vs V_I, V_{CC} = 2.5 V

Copyright © 1997–2018, Texas Instruments Incorporated

7 Parameter Measurement Information

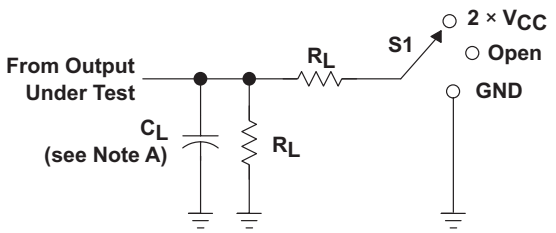

LOAD CIRCUIT

TEST	S1
t_{PLH}/t_{PHL} t_{PLZ}/t_{PZL} t_{PHZ}/t_{PZH}	Open 2 × V_{CC} GND

V_{CC}	C_L	R_L	V_Δ
2.5 V ±0.2 V	30 pF	500 Ω	0.15 V
3.3 V ±0.3 V	50 pF	500 Ω	0.3 V

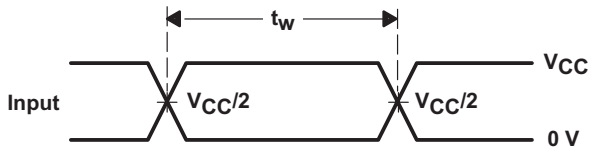

VOLTAGE WAVEFORMS
PULSE DURATION

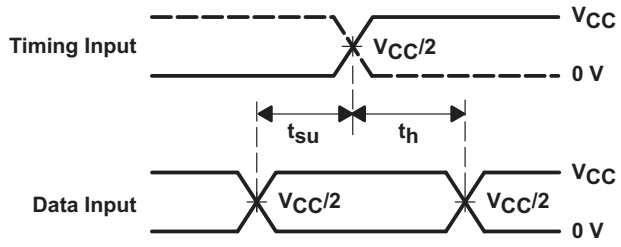

VOLTAGE WAVEFORMS
SETUP AND HOLD TIMES

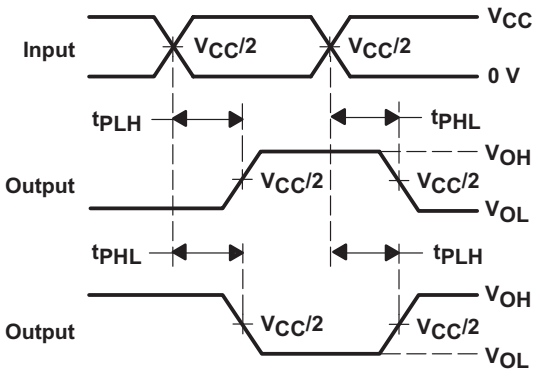

VOLTAGE WAVEFORMS
PROPAGATION DELAY TIMES
INVERTING AND NONINVERTING OUTPUTS

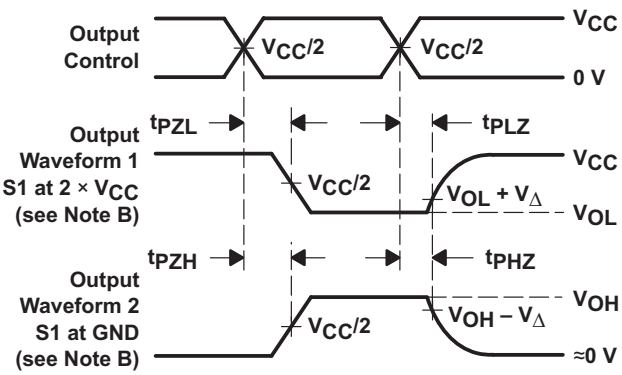

VOLTAGE WAVEFORMS
ENABLE AND DISABLE TIMES
LOW- AND HIGH-LEVEL ENABLING

Figure 2. Test Circuit and Voltage Waveforms

8 Detailed Description

8.1 Overview

The SN74CBTLV3253 device is a dual 1-of-4 high-speed FET multiplexer/demultiplexer. The low ON-state resistance of the switch allows connections to be made with minimal propagation delay.

The select (S0, S1) inputs control the data flow. The FET multiplexers and demultiplexers are disabled when the associated output-enable ($\overline{OE}$) input is high.

The SN74CBTLV3253 device is fully specified for partial-power-down applications using I_{off}. The I_{off} feature ensures that damaging current will not backflow through the device when it is powered down. The device has isolation during power off.

To ensure the high-impedance state during power up or power down, $\overline{OE}$ should be tied to V_{CC} through a pullup resistor; the minimum value of the resistor is determined by the current-sinking capability of the driver.

8.2 Functional Block Diagram

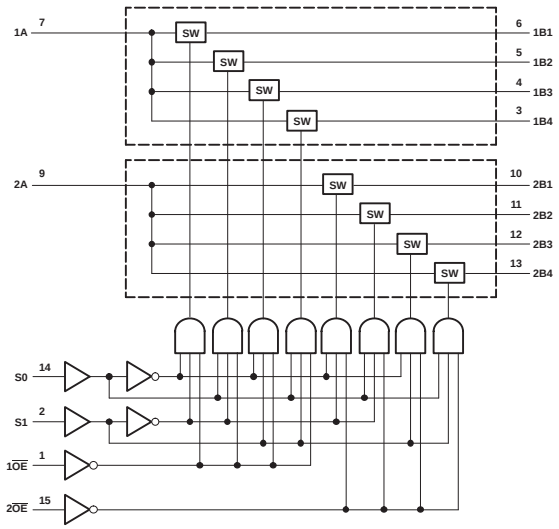

8.3 Feature Description

The SN74CBTLV3253 device is functionally equivalent to the QS3253 and has a 5-Ω switch connection between two ports

It also has rail-to-rail switching on data I/O ports as well as I_{off} supporting partial-power-down mode operation

8.4 Device Functional Modes

Table 1 lists the functional modes of the SN74CBTLV3253.

Table 1. Function Table (Each Multiplexer/Demultiplexer)

INPUTS			FUNCTION
$\overline{OE}$	S1	S0	
L	L	L	A port = B1 port
L	L	H	A port = B2 port
L	H	L	A port = B3 port
L	H	H	A port = B4 port
H	X	X	Disconnect

Copyright © 1997–2018, Texas Instruments Incorporated

9 Application and Implementation

NOTE

Information in the following applications sections is not part of the TI component specification, and TI does not warrant its accuracy or completeness. TI's customers are responsible for determining suitability of components for their purposes. Customers should validate and test their design implementation to confirm system functionality.

9.1 Application Information

The SN74CBTLV3253 can be used to multiplex and demultiplex up to 2 channels simultaneously in a 4:1 configuration. The application shown here is a 2-bit bus being multiplexed between two devices. the $\overline{OE}$ and S pins are used to control the chip from the bus controller. This is a very generic example, and could apply to many situations.

9.2 Typical Application

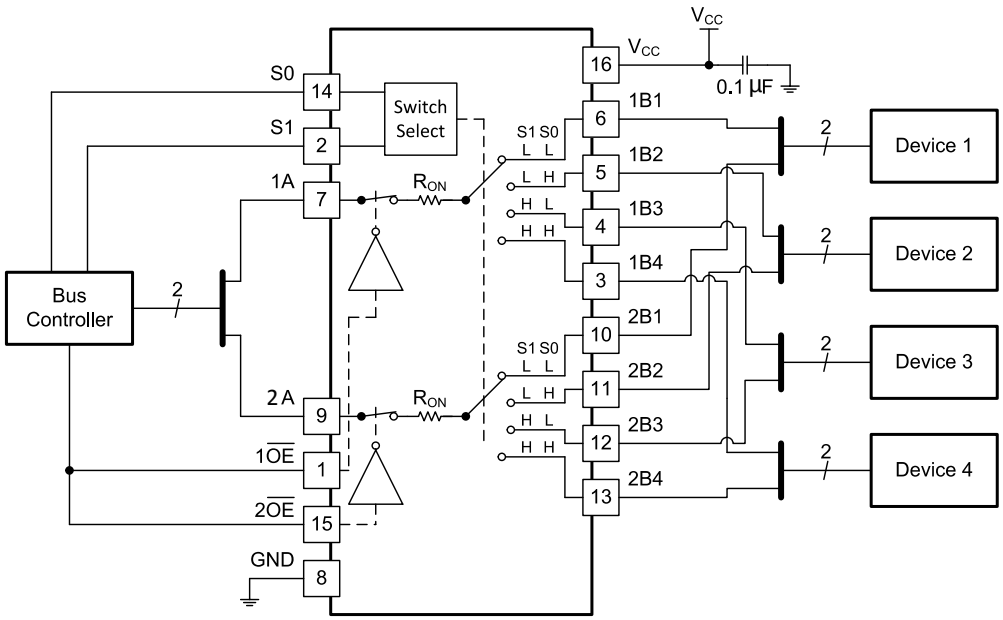

Figure 3. Typical Application of the SN74CBTLV3253

9.2.1 Design Requirements

The 0.1µF capacitor should be placed as close as possible to the device.

9.2.2 Detailed Design Procedure

1. Recommended Input Conditions:
   – For specified high and low levels, see V_{IH} and V_{IL} in *Recommended Operating Conditions* .
   – Inputs and outputs are overvoltage tolerant slowing them to go as high as 4.6 V at any valid V_{CC}.
2. Recommended Output Conditions:
   – Load currents should not exceed ±128 mA per channel.
3. Frequency Selection Criterion:
   – Added trace resistance/capacitance can reduce maximum frequency capability; use layout practices as directed in *Layout*.

Typical Application (continued)

9.2.3 Application Curve

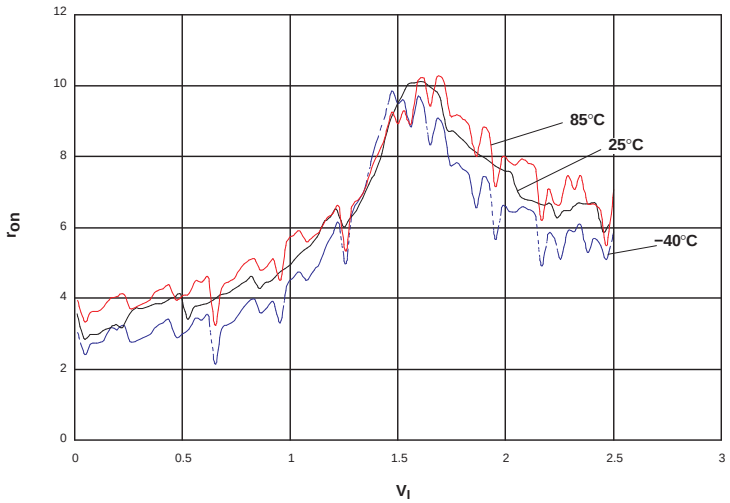

Figure 4. r_{on} vs V_I, V_{CC} = 2.5 V

10 Power Supply Recommendations

The power supply can be any voltage between the minimum and maximum supply voltage rating listed in the *Recommended Operating Conditions* table.

Each V_{CC} terminal should have a good bypass capacitor to prevent power disturbance. For devices with a single supply, a 0.1-µF bypass capacitor is recommended. If multiple pins are labeled V_{CC}, then a 0.01-µF or 0.022-µF capacitor is recommended for each V_{CC} because the V_{CC} pins are tied together internally. For devices with dual-supply pins operating at different voltages, for example V_{CC} and V_{DD}, a 0.1-µF bypass capacitor is recommended for each supply pin. To reject different frequencies of noise, use multiple bypass capacitors in parallel. Capacitors with values of 0.1 µF and 1 µF are commonly used in parallel. The bypass capacitor should be installed as close to the power terminal as possible for best results.

Copyright © 1997–2018, Texas Instruments Incorporated

11 Layout

11.1 Layout Guidelines

Reflections and matching are closely related to the loop antenna theory but are different enough to be discussed separately from the theory. When a PCB trace turns a corner at a 90° angle, a reflection can occur. A reflection occurs primarily because of the change of width of the trace. At the apex of the turn, the trace width increases to 1.414 times the width. This increase upsets the transmission-line characteristics, especially the distributed capacitance and self–inductance of the trace which results in the reflection. Not all PCB traces can be straight and therefore some traces must turn corners. Figure 5 shows progressively better techniques of rounding corners. Only the last example (BEST) maintains constant trace width and minimizes reflections.

11.2 Layout Example

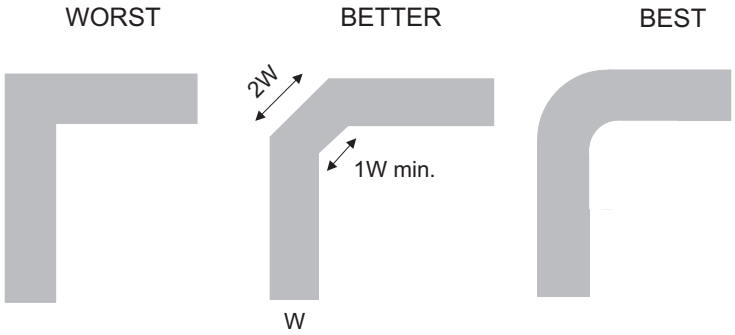

Figure 5. Trace Example

12 Device and Documentation Support

12.1 Documentation Support

12.1.1 Related Documentation

For related documentation, see the following:

Implications of Slow or Floating CMOS Inputs, SCBA004

12.2 Community Resources

The following links connect to TI community resources. Linked contents are provided "AS IS" by the respective contributors. They do not constitute TI specifications and do not necessarily reflect TI's views; see TI's Terms of Use.

TI E2E™ Online Community ***TI's Engineer-to-Engineer (E2E) Community.*** Created to foster collaboration among engineers. At e2e.ti.com, you can ask questions, share knowledge, explore ideas and help solve problems with fellow engineers.

Design Support ***TI's Design Support*** Quickly find helpful E2E forums along with design support tools and contact information for technical support.

12.3 Trademarks

E2E is a trademark of Texas Instruments.
All other trademarks are the property of their respective owners.

12.4 Electrostatic Discharge Caution

These devices have limited built-in ESD protection. The leads should be shorted together or the device placed in conductive foam during storage or handling to prevent electrostatic damage to the MOS gates.

12.5 Glossary

SLYZ022 — *TI Glossary*.

This glossary lists and explains terms, acronyms, and definitions.

13 Mechanical, Packaging, and Orderable Information

The following pages include mechanical, packaging, and orderable information. This information is the most current data available for the designated devices. This data is subject to change without notice and revision of this document. For browser-based versions of this data sheet, refer to the left-hand navigation.

Copyright © 1997–2018, Texas Instruments Incorporated

PACKAGING INFORMATION

Orderable Device	Status (1)	Package Type	Package Drawing	Pins	Package Qty	Eco Plan (2)	Lead/Ball Finish (6)	MSL Peak Temp (3)	Op Temp (°C)	Device Marking (4/5)	Samples
74CBTLV3253PWRG4	ACTIVE	TSSOP	PW	16	2000	Green (RoHS & no Sb/Br)	CU NIPDAU	Level-1-260C-UNLIM	-40 to 85	CL253	Samples
SN74CBTLV3253D	ACTIVE	SOIC	D	16	40	Green (RoHS & no Sb/Br)	CU NIPDAU	Level-1-260C-UNLIM	-40 to 85	CBTLV3253	Samples
SN74CBTLV3253DBQR	ACTIVE	SSOP	DBQ	16	2500	Green (RoHS & no Sb/Br)	CU NIPDAU	Level-2-260C-1 YEAR	-40 to 85	CL253	Samples
SN74CBTLV3253DE4	ACTIVE	SOIC	D	16	40	Green (RoHS & no Sb/Br)	CU NIPDAU	Level-1-260C-UNLIM	-40 to 85	CBTLV3253	Samples
SN74CBTLV3253DGVR	ACTIVE	TVSOP	DGV	16	2000	Green (RoHS & no Sb/Br)	CU NIPDAU	Level-1-260C-UNLIM	-40 to 85	CL253	Samples
SN74CBTLV3253DR	ACTIVE	SOIC	D	16	2500	Green (RoHS & no Sb/Br)	CU NIPDAU	Level-1-260C-UNLIM	-40 to 85	CBTLV3253	Samples
SN74CBTLV3253DRE4	ACTIVE	SOIC	D	16	2500	Green (RoHS & no Sb/Br)	CU NIPDAU	Level-1-260C-UNLIM	-40 to 85	CBTLV3253	Samples
SN74CBTLV3253PW	ACTIVE	TSSOP	PW	16	90	Green (RoHS & no Sb/Br)	CU NIPDAU	Level-1-260C-UNLIM	-40 to 85	CL253	Samples
SN74CBTLV3253PWR	ACTIVE	TSSOP	PW	16	2000	Green (RoHS & no Sb/Br)	CU NIPDAU	Level-1-260C-UNLIM	-40 to 85	CL253	Samples
SN74CBTLV3253RGYR	ACTIVE	VQFN	RGY	16	3000	Green (RoHS & no Sb/Br)	CU NIPDAU	Level-2-260C-1 YEAR	-40 to 85	CL253	Samples

(1) The marketing status values are defined as follows:
ACTIVE: Product device recommended for new designs.
LIFEBUY: TI has announced that the device will be discontinued, and a lifetime-buy period is in effect.
NRND: Not recommended for new designs. Device is in production to support existing customers, but TI does not recommend using this part in a new design.
PREVIEW: Device has been announced but is not in production. Samples may or may not be available.
OBSOLETE: TI has discontinued the production of the device.

(2) **RoHS:** TI defines "RoHS" to mean semiconductor products that are compliant with the current EU RoHS requirements for all 10 RoHS substances, including the requirement that RoHS substance do not exceed 0.1% by weight in homogeneous materials. Where designed to be soldered at high temperatures, "RoHS" products are suitable for use in specified lead-free processes. TI may reference these types of products as "Pb-Free".
RoHS Exempt: TI defines "RoHS Exempt" to mean products that contain lead but are compliant with EU RoHS pursuant to a specific EU RoHS exemption.
Green: TI defines "Green" to mean the content of Chlorine (Cl) and Bromine (Br) based flame retardants meet JS709B low halogen requirements of <=1000ppm threshold. Antimony trioxide based flame retardants must also meet the <=1000ppm threshold requirement.

(3) MSL, Peak Temp. - The Moisture Sensitivity Level rating according to the JEDEC industry standard classifications, and peak solder temperature.

(4) There may be additional marking, which relates to the logo, the lot trace code information, or the environmental category on the device.

(5) Multiple Device Markings will be inside parentheses. Only one Device Marking contained in parentheses and separated by a "~" will appear on a device. If a line is indented then it is a continuation of the previous line and the two combined represent the entire Device Marking for that device.

(6) Lead/Ball Finish - Orderable Devices may have multiple material finish options. Finish options are separated by a vertical ruled line. Lead/Ball Finish values may wrap to two lines if the finish value exceeds the maximum column width.

Important Information and Disclaimer: The information provided on this page represents TI's knowledge and belief as of the date that it is provided. TI bases its knowledge and belief on information provided by third parties, and makes no representation or warranty as to the accuracy of such information. Efforts are underway to better integrate information from third parties. TI has taken and continues to take reasonable steps to provide representative and accurate information but may not have conducted destructive testing or chemical analysis on incoming materials and chemicals. TI and TI suppliers consider certain information to be proprietary, and thus CAS numbers and other limited information may not be available for release.

In no event shall TI's liability arising out of such information exceed the total purchase price of the TI part(s) at issue in this document sold by TI to Customer on an annual basis.

TAPE AND REEL INFORMATION

REEL DIMENSIONS

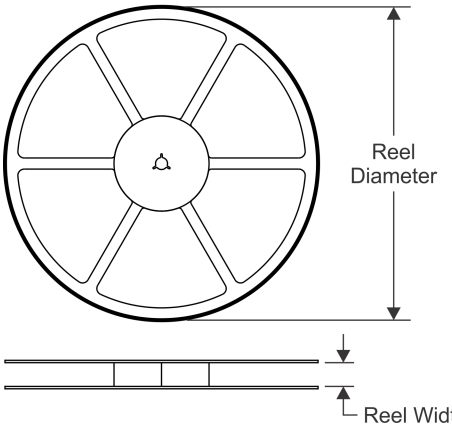

TAPE DIMENSIONS

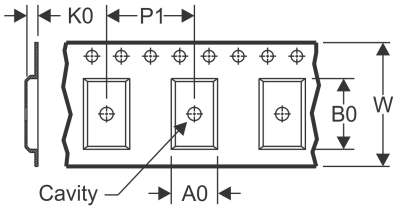

A0	Dimension designed to accommodate the component width
B0	Dimension designed to accommodate the component length
K0	Dimension designed to accommodate the component thickness
W	Overall width of the carrier tape
P1	Pitch between successive cavity centers

QUADRANT ASSIGNMENTS FOR PIN 1 ORIENTATION IN TAPE

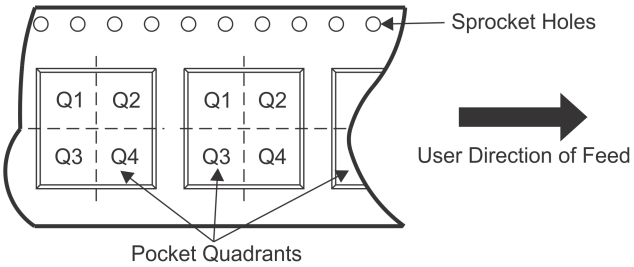

*All dimensions are nominal

Device	Package Type	Package Drawing	Pins	SPQ	Reel Diameter (mm)	Reel Width W1 (mm)	A0 (mm)	B0 (mm)	K0 (mm)	P1 (mm)	W (mm)	Pin1 Quadrant
SN74CBTLV3253DBQR	SSOP	DBQ	16	2500	330.0	12.5	6.4	5.2	2.1	8.0	12.0	Q1
SN74CBTLV3253DGVR	TVSOP	DGV	16	2000	330.0	12.4	6.8	4.0	1.6	8.0	12.0	Q1
SN74CBTLV3253DR	SOIC	D	16	2500	330.0	16.4	6.5	10.3	2.1	8.0	16.0	Q1
SN74CBTLV3253PWR	TSSOP	PW	16	2000	330.0	12.4	6.9	5.6	1.6	8.0	12.0	Q1
SN74CBTLV3253RGYR	VQFN	RGY	16	3000	330.0	12.4	3.8	4.3	1.5	8.0	12.0	Q1

TAPE AND REEL BOX DIMENSIONS

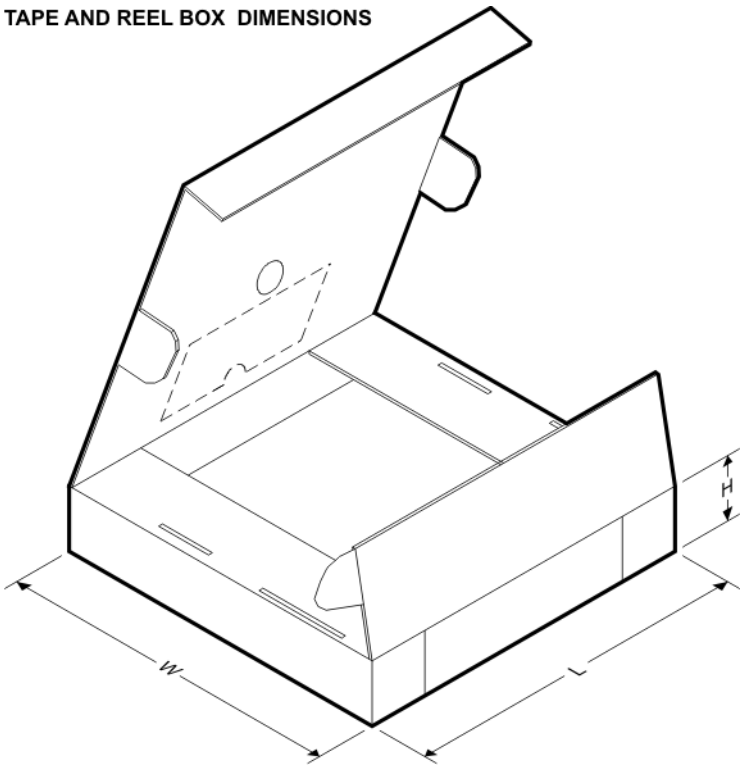

*All dimensions are nominal

Device	Package Type	Package Drawing	Pins	SPQ	Length (mm)	Width (mm)	Height (mm)
SN74CBTLV3253DBQR	SSOP	DBQ	16	2500	340.5	338.1	20.6
SN74CBTLV3253DGVR	TVSOP	DGV	16	2000	367.0	367.0	35.0
SN74CBTLV3253DR	SOIC	D	16	2500	333.2	345.9	28.6
SN74CBTLV3253PWR	TSSOP	PW	16	2000	367.0	367.0	35.0
SN74CBTLV3253RGYR	VQFN	RGY	16	3000	367.0	367.0	35.0

DBQ 16 SSOP - 1.75 mm max height

SHRINK SMALL-OUTLINE PACKAGE

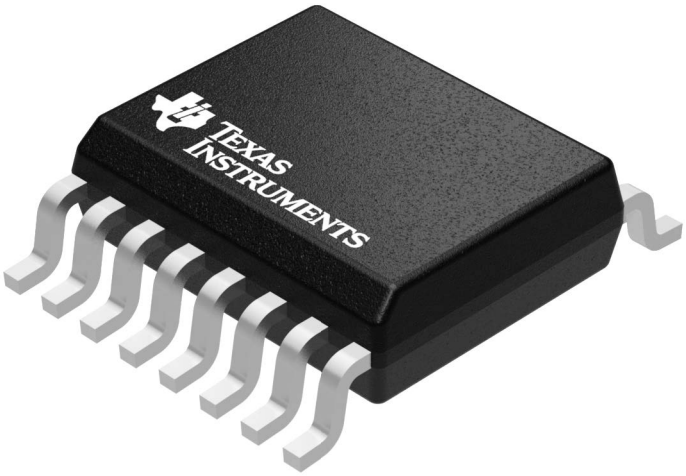

Images above are just a representation of the package family, actual package may vary.
Refer to the product data sheet for package details.

4073301-2/I

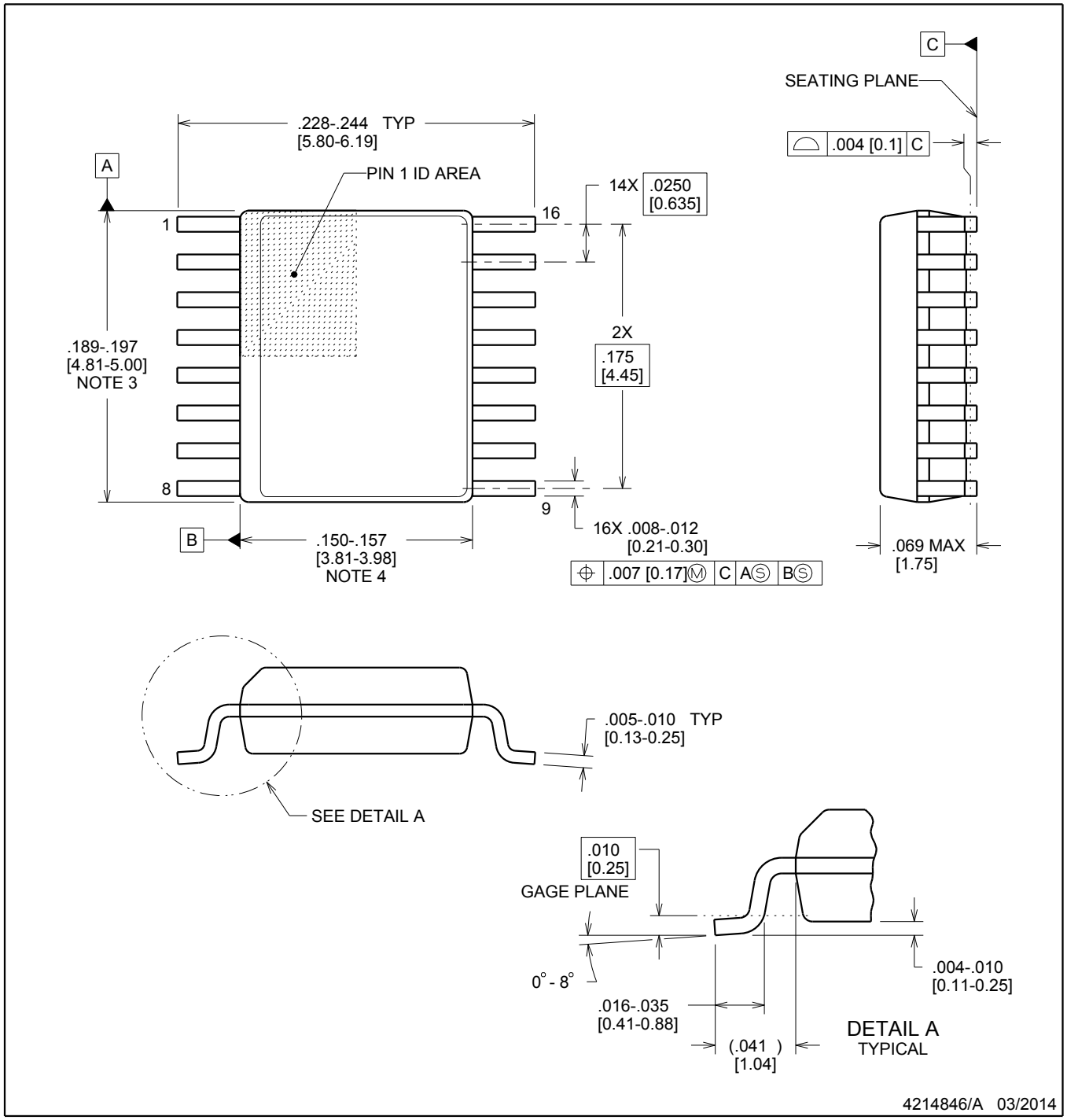

NOTES:

1. Linear dimensions are in inches [millimeters]. Dimensions in parenthesis are for reference only. Controlling dimensions are in inches. Dimensioning and tolerancing per ASME Y14.5M.
2. This drawing is subject to change without notice.
3. This dimension does not include mold flash, protrusions, or gate burrs. Mold flash, protrusions, or gate burrs shall not exceed .006 inch, per side.
4. This dimension does not include interlead flash.
5. Reference JEDEC registration MO-137, variation AB.

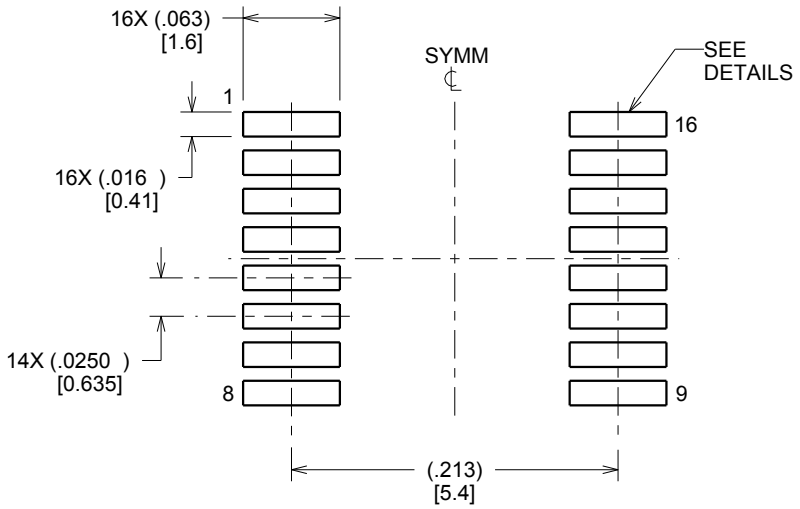

LAND PATTERN EXAMPLE
SCALE:8X

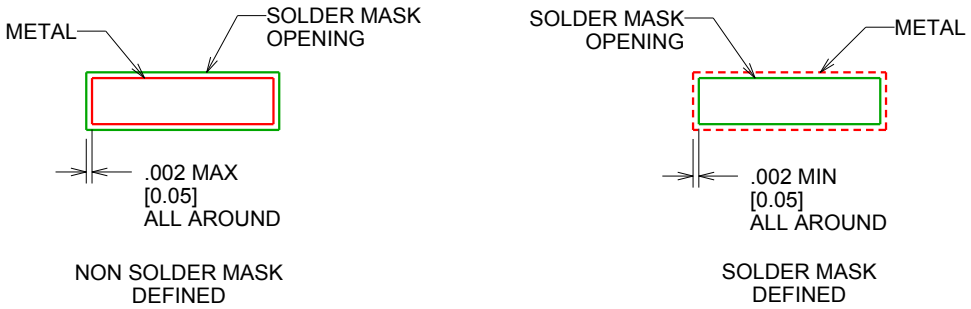

SOLDER MASK DETAILS

4214846/A 03/2014

NOTES: (continued)

6. Publication IPC-7351 may have alternate designs.
7. Solder mask tolerances between and around signal pads can vary based on board fabrication site.

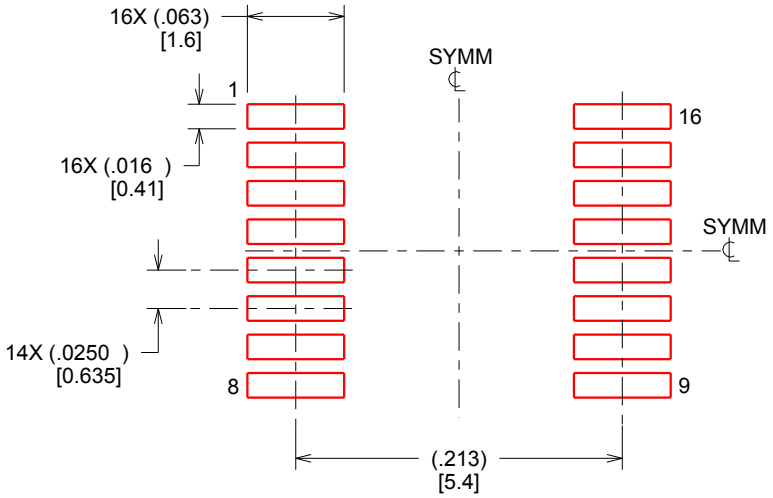

SOLDER PASTE EXAMPLE
BASED ON .005 INCH [0.127 MM] THICK STENCIL
SCALE:8X

4214846/A 03/2014

NOTES: (continued)

8. Laser cutting apertures with trapezoidal walls and rounded corners may offer better paste release. IPC-7525 may have alternate design recommendations.
9. Board assembly site may have different recommendations for stencil design.

RGY (R-PVQFN-N16) PLASTIC QUAD FLATPACK NO-LEAD

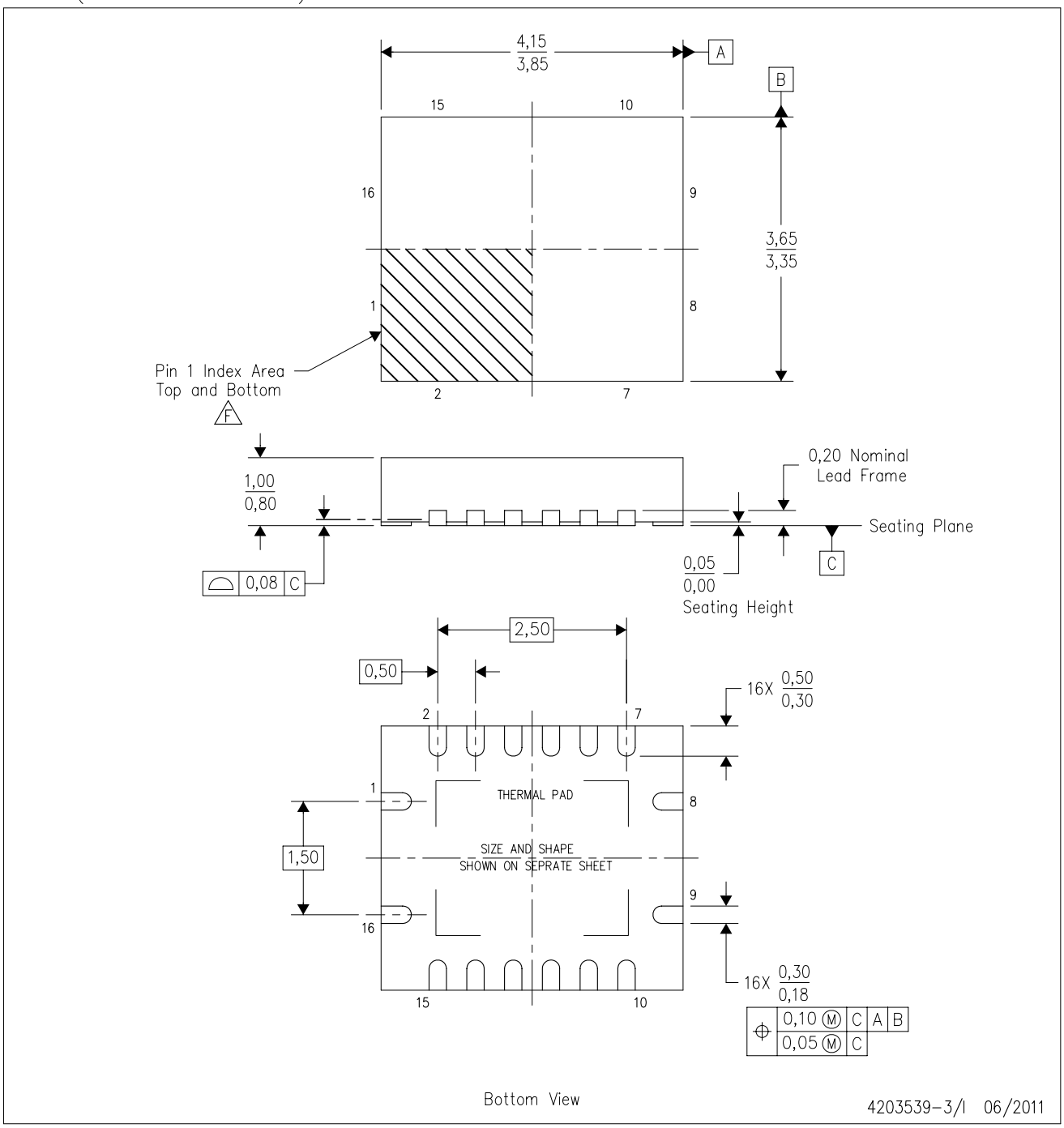

NOTES:
- A. All linear dimensions are in millimeters. Dimensioning and tolerancing per ASME Y14.5M-1994.
- B. This drawing is subject to change without notice.
- C. QFN (Quad Flatpack No-Lead) package configuration.
- D. The package thermal pad must be soldered to the board for thermal and mechanical performance.
- E. See the additional figure in the Product Data Sheet for details regarding the exposed thermal pad features and dimensions.
- F. Pin 1 identifiers are located on both top and bottom of the package and within the zone indicated. The Pin 1 identifiers are either a molded, marked, or metal feature.
- G. Package complies to JEDEC MO-241 variation BA.

RGY (R–PVQFN–N16) PLASTIC QUAD FLATPACK NO–LEAD

THERMAL INFORMATION

This package incorporates an exposed thermal pad that is designed to be attached directly to an external heatsink. The thermal pad must be soldered directly to the printed circuit board (PCB). After soldering, the PCB can be used as a heatsink. In addition, through the use of thermal vias, the thermal pad can be attached directly to the appropriate copper plane shown in the electrical schematic for the device, or alternatively, can be attached to a special heatsink structure designed into the PCB. This design optimizes the heat transfer from the integrated circuit (IC).

For information on the Quad Flatpack No–Lead (QFN) package and its advantages, refer to Application Report, QFN/SON PCB Attachment, Texas Instruments Literature No. SLUA271. This document is available at www.ti.com.

The exposed thermal pad dimensions for this package are shown in the following illustration.

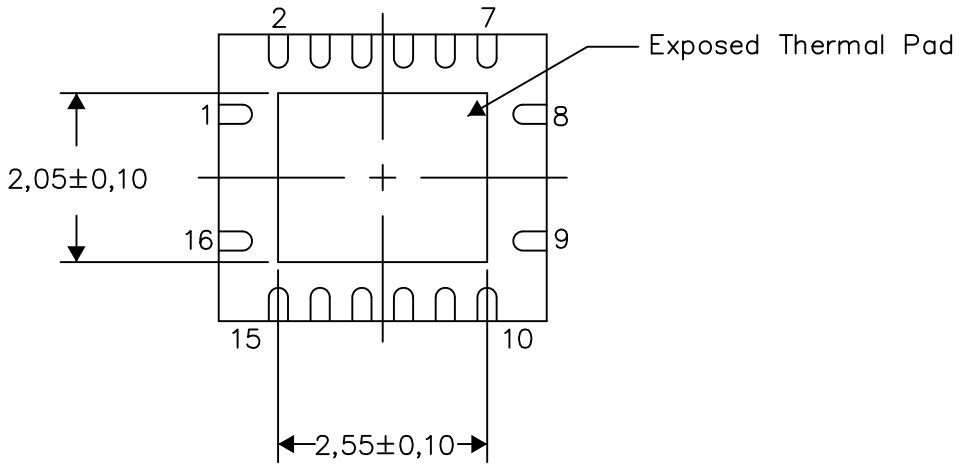

Bottom View

Exposed Thermal Pad Dimensions

4206353–3/P 03/14

NOTE: All linear dimensions are in millimeters

RGY (R–PVQFN–N16) PLASTIC QUAD FLATPACK NO–LEAD

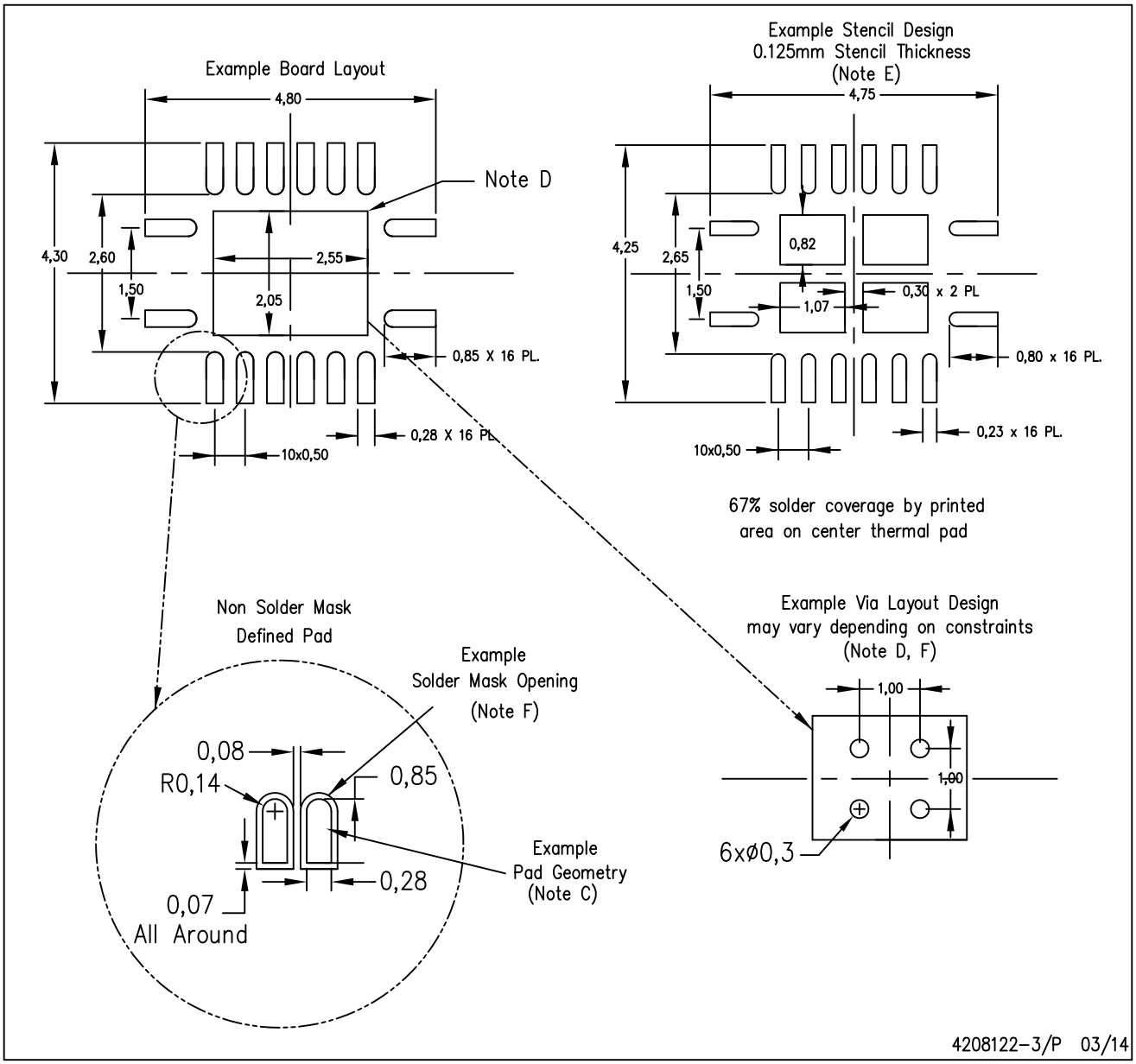

NOTES:
A. All linear dimensions are in millimeters.
B. This drawing is subject to change without notice.
C. Publication IPC–7351 is recommended for alternate designs.
D. This package is designed to be soldered to a thermal pad on the board. Refer to Application Note, Quad Flat–Pack QFN/SON PCB Attachment, Texas Instruments Literature No. SLUA271, and also the Product Data Sheets for specific thermal information, via requirements, and recommended board layout. These documents are available at www.ti.com <http://www.ti.com>.
E. Laser cutting apertures with trapezoidal walls and also rounding corners will offer better paste release. Customers should contact their board assembly site for stencil design recommendations. Refer to IPC 7525 for stencil design considerations.
F. Customers should contact their board fabrication site for minimum solder mask web tolerances between signal pads.

D (R–PDSO–G16) PLASTIC SMALL OUTLINE

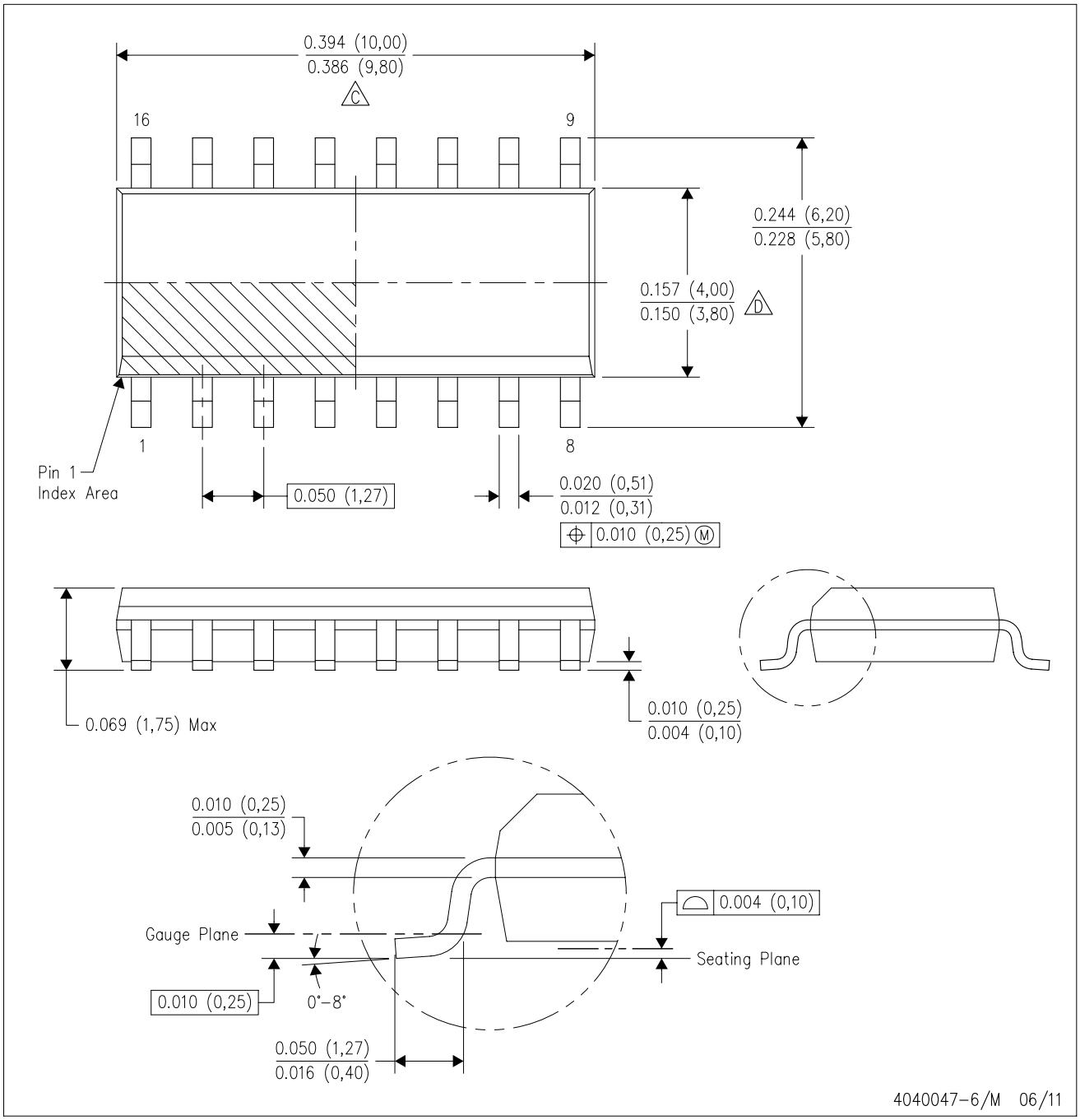

NOTES:
A. All linear dimensions are in inches (millimeters).
B. This drawing is subject to change without notice.
C. Body length does not include mold flash, protrusions, or gate burrs. Mold flash, protrusions, or gate burrs shall not exceed 0.006 (0,15) each side.
D. Body width does not include interlead flash. Interlead flash shall not exceed 0.017 (0,43) each side.
E. Reference JEDEC MS–012 variation AC.

D (R–PDSO–G16) PLASTIC SMALL OUTLINE

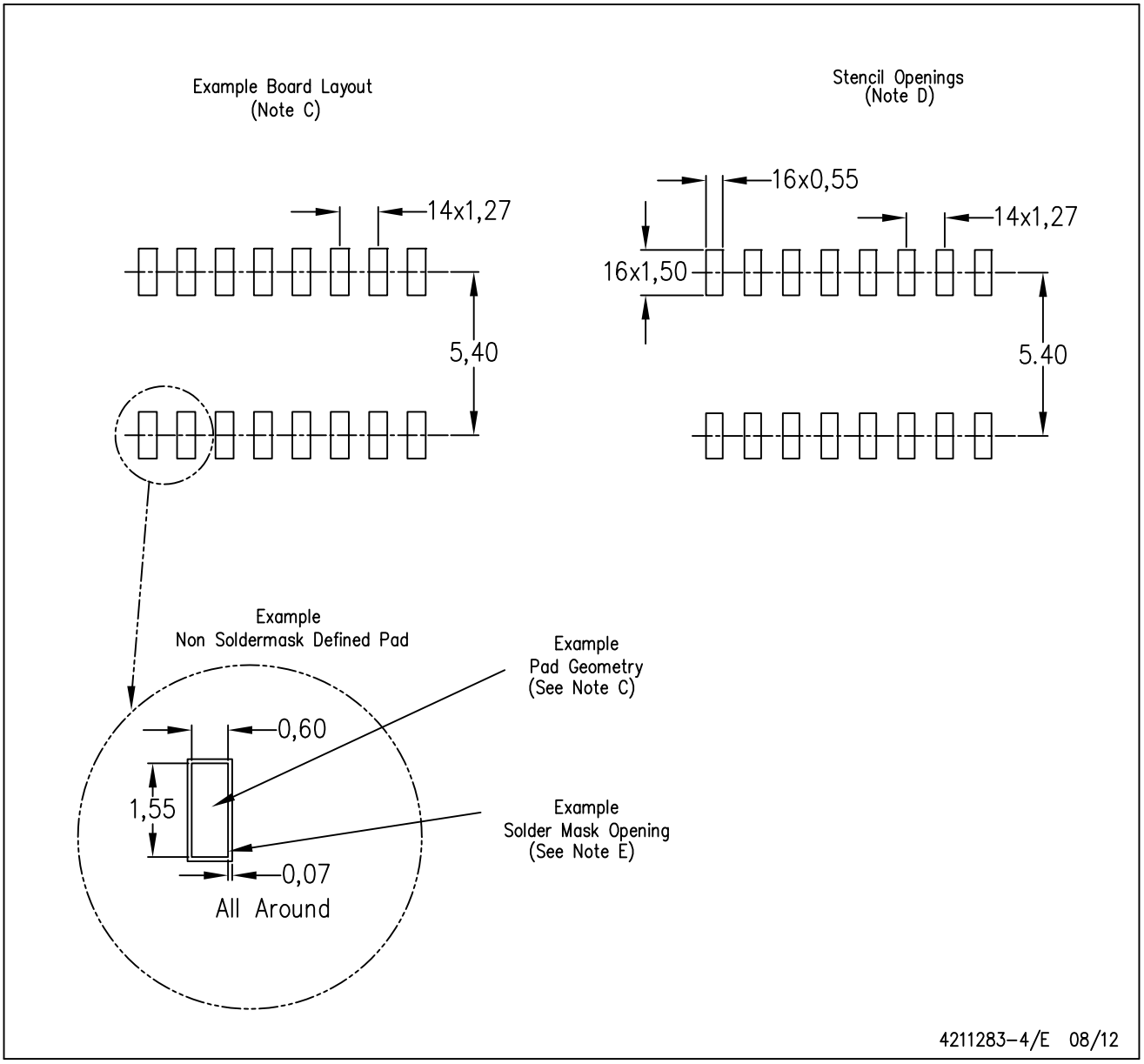

NOTES:
A. All linear dimensions are in millimeters.
B. This drawing is subject to change without notice.
C. Publication IPC–7351 is recommended for alternate designs.
D. Laser cutting apertures with trapezoidal walls and also rounding corners will offer better paste release. Customers should contact their board assembly site for stencil design recommendations. Refer to IPC–7525 for other stencil recommendations.
E. Customers should contact their board fabrication site for solder mask tolerances between and around signal pads.

PW0016A

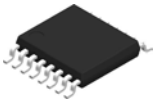

PACKAGE OUTLINE

TSSOP - 1.2 mm max height

SMALL OUTLINE PACKAGE

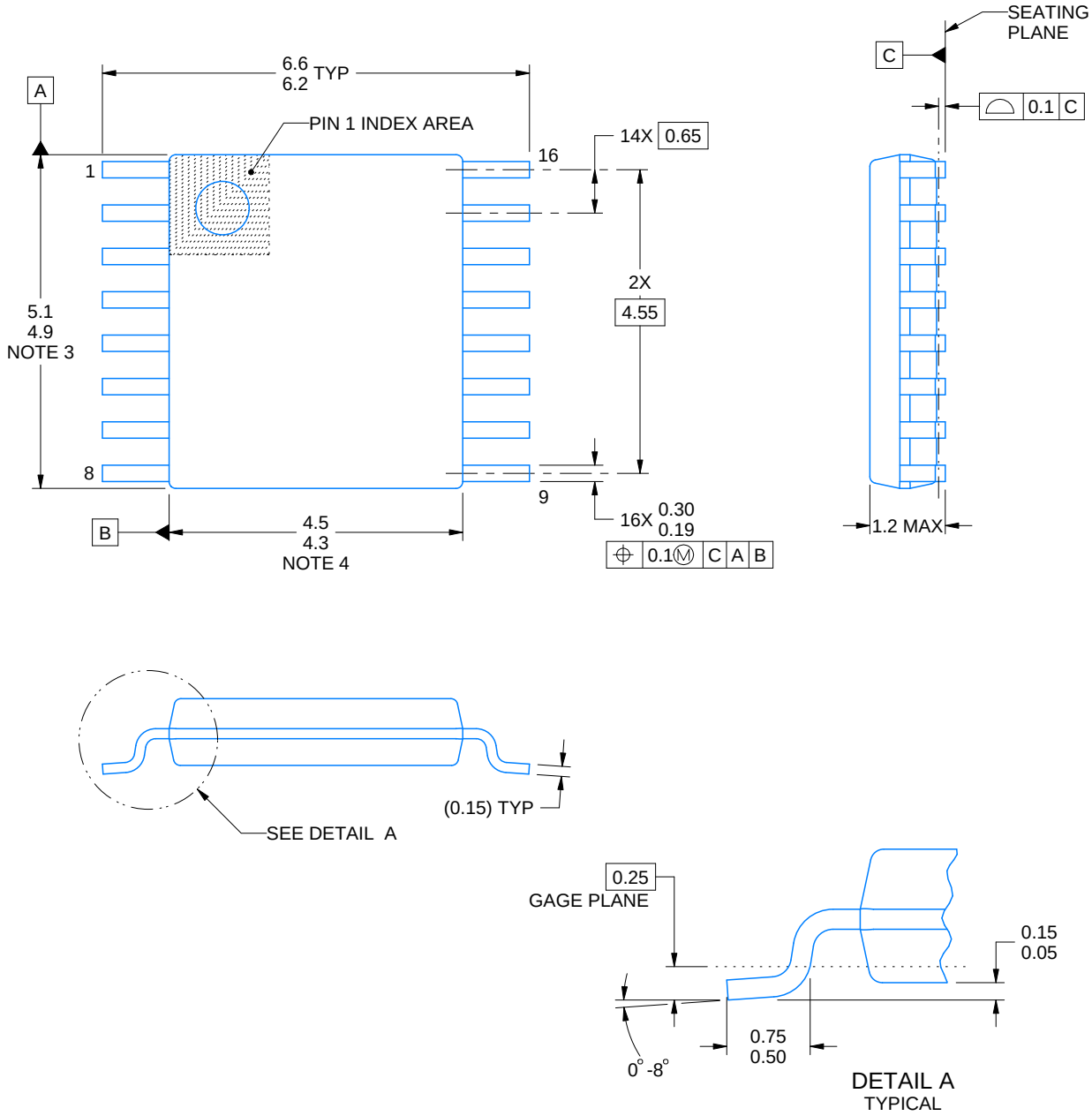

NOTES:

1. All linear dimensions are in millimeters. Any dimensions in parenthesis are for reference only. Dimensioning and tolerancing per ASME Y14.5M.
2. This drawing is subject to change without notice.
3. This dimension does not include mold flash, protrusions, or gate burrs. Mold flash, protrusions, or gate burrs shall not exceed 0.15 mm per side.
4. This dimension does not include interlead flash. Interlead flash shall not exceed 0.25 mm per side.
5. Reference JEDEC registration MO-153.

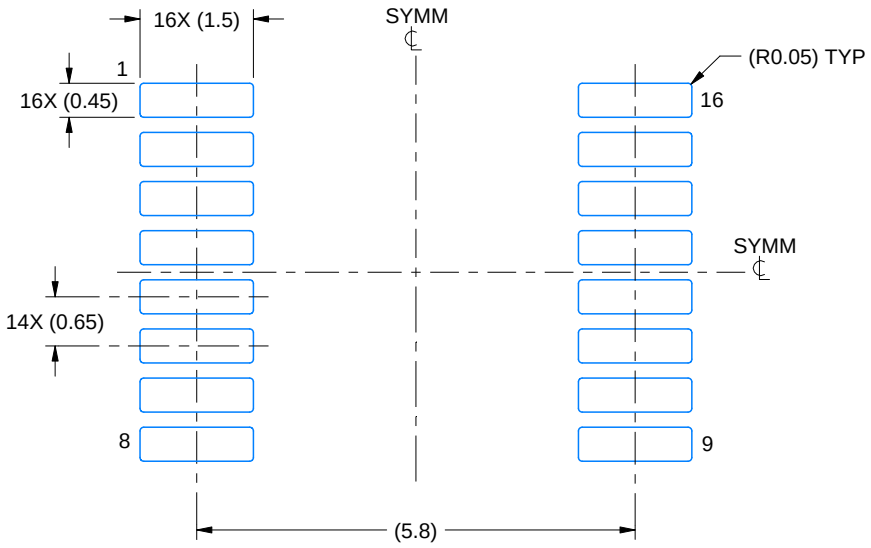

LAND PATTERN EXAMPLE
EXPOSED METAL SHOWN
SCALE: 10X

NON-SOLDER MASK DEFINED (PREFERRED)

SOLDER MASK DEFINED

SOLDER MASK DETAILS

4220204/A 02/2017

NOTES: (continued)

6. Publication IPC-7351 may have alternate designs.
7. Solder mask tolerances between and around signal pads can vary based on board fabrication site.

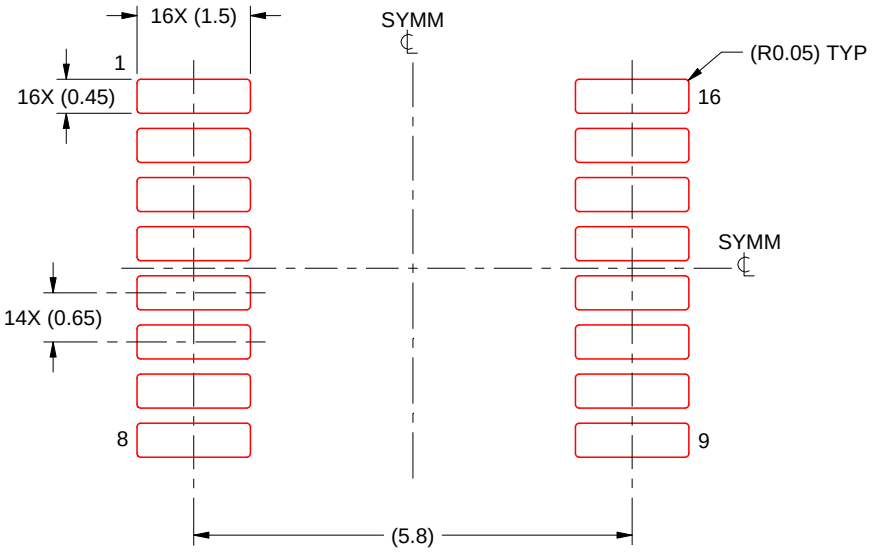

SOLDER PASTE EXAMPLE
BASED ON 0.125 mm THICK STENCIL
SCALE: 10X

4220204/A 02/2017

NOTES: (continued)

8. Laser cutting apertures with trapezoidal walls and rounded corners may offer better paste release. IPC-7525 may have alternate design recommendations.
9. Board assembly site may have different recommendations for stencil design.

DGV (R-PDSO-G)** **PLASTIC SMALL-OUTLINE**

24 PINS SHOWN

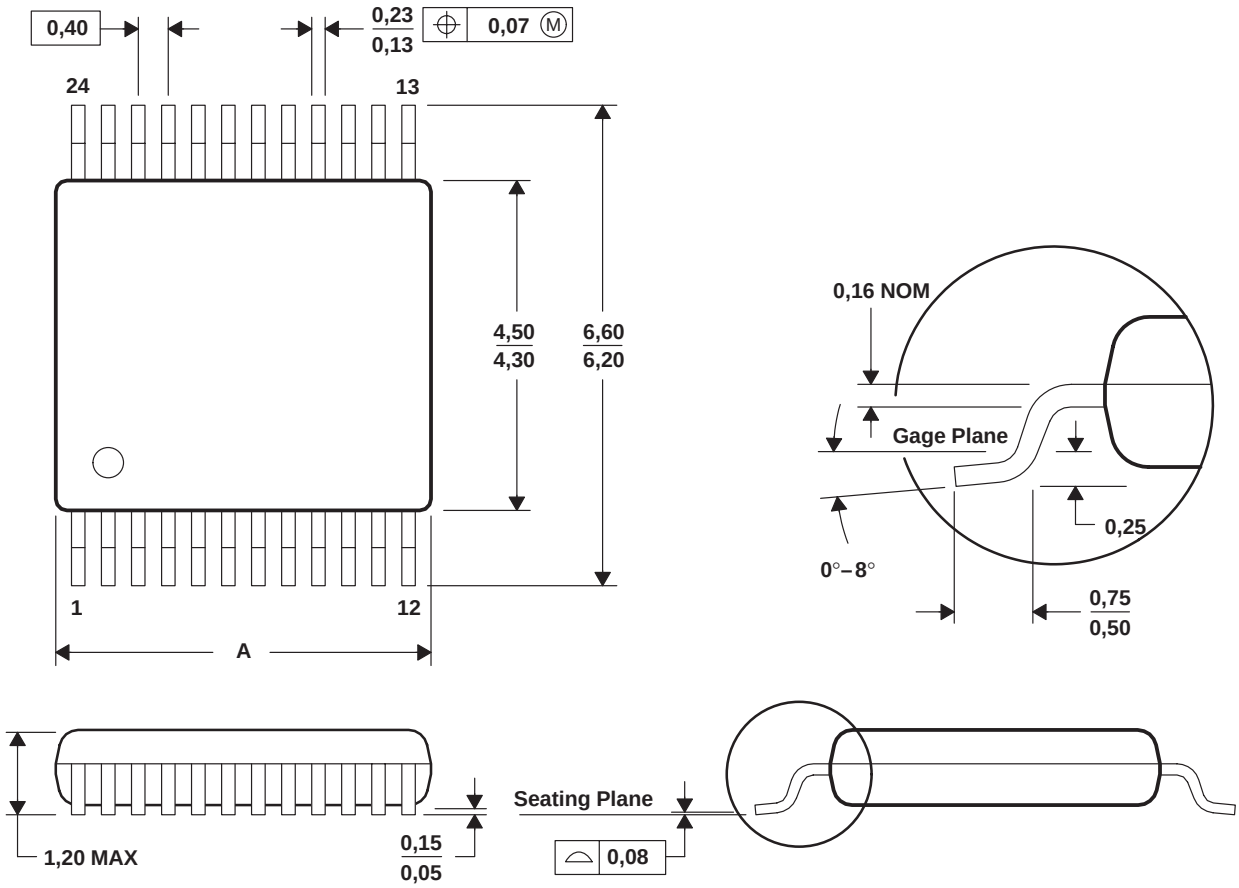

DIM \ PINS **	14	16	20	24	38	48	56
A MAX	3,70	3,70	5,10	5,10	7,90	9,80	11,40
A MIN	3,50	3,50	4,90	4,90	7,70	9,60	11,20

4073251/E 08/00

NOTES: A. All linear dimensions are in millimeters.
B. This drawing is subject to change without notice.
C. Body dimensions do not include mold flash or protrusion, not to exceed 0,15 per side.
D. Falls within JEDEC: 24/48 Pins – MO-153
14/16/20/56 Pins – MO-194

IMPORTANT NOTICE AND DISCLAIMER

TI PROVIDES TECHNICAL AND RELIABILITY DATA (INCLUDING DATASHEETS), DESIGN RESOURCES (INCLUDING REFERENCE DESIGNS), APPLICATION OR OTHER DESIGN ADVICE, WEB TOOLS, SAFETY INFORMATION, AND OTHER RESOURCES “AS IS” AND WITH ALL FAULTS, AND DISCLAIMS ALL WARRANTIES, EXPRESS AND IMPLIED, INCLUDING WITHOUT LIMITATION ANY IMPLIED WARRANTIES OF MERCHANTABILITY, FITNESS FOR A PARTICULAR PURPOSE OR NON-INFRINGEMENT OF THIRD PARTY INTELLECTUAL PROPERTY RIGHTS.

These resources are intended for skilled developers designing with TI products. You are solely responsible for (1) selecting the appropriate TI products for your application, (2) designing, validating and testing your application, and (3) ensuring your application meets applicable standards, and any other safety, security, or other requirements. These resources are subject to change without notice. TI grants you permission to use these resources only for development of an application that uses the TI products described in the resource. Other reproduction and display of these resources is prohibited. No license is granted to any other TI intellectual property right or to any third party intellectual property right. TI disclaims responsibility for, and you will fully indemnify TI and its representatives against, any claims, damages, costs, losses, and liabilities arising out of your use of these resources.

TI’s products are provided subject to TI’s Terms of Sale (www.ti.com/legal/termsofsale.html) or other applicable terms available either on ti.com or provided in conjunction with such TI products. TI’s provision of these resources does not expand or otherwise alter TI’s applicable warranties or warranty disclaimers for TI products.

Mailing Address: Texas Instruments, Post Office Box 655303, Dallas, Texas 75265
Copyright © 2018, Texas Instruments Incorporated